DRAWING No.	SHT.		THIRD ANGLE PROJECTION		DO NOT SCALE IF IN DOUBT ASK	Q.A.		H/S SETT	
152035	1 OF 1 SHTS.			BS 8888		H/S Q.A.		REL. INSP.	
						H/S PROD		EXT.ISS.CODE	7/12

© THE COPYRIGHT OF THIS DRAWING IS RESERVED BY HELLERMANN TYTON. IT IS ISSUED ON CONDITION THAT IT IS NOT COPIED, REPRODUCED OR DISCLOSED TO A THIRD PARTY EITHER WHOLLY OR IN PART WITHOUT THE CONSENT IN WRITING OF HELLERMANN TYTON.

STANDARD PART (AFTER UNRESTRICTED RECOVERY)

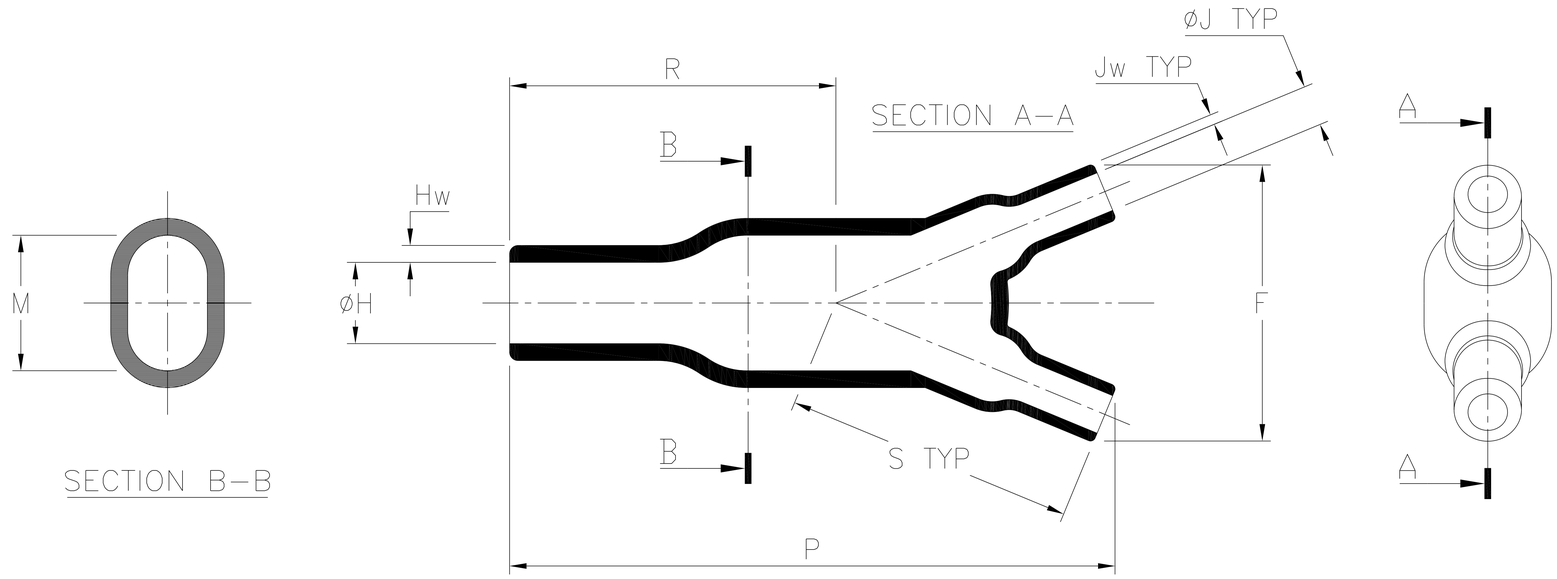

EXPANDED (AS SUPPLIED)

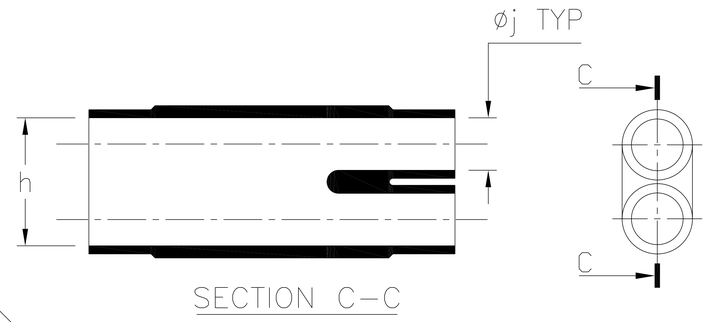

Hilltop Products Ltd - www.hilltop-products.co.uk -

	SPEC.	PART NO.	EXPANDED DIMENSIONS (AS SUPPLIED) h MIN	EXPANDED DIMENSIONS (AS SUPPLIED) øj MIN	RECOVERED DIAMETERS øH MAX	RECOVERED DIAMETERS øJ MAX	RECOVERED DIMENSIONS F ±15%	M MAX	P ±15%	R NOM	S NOM	Hw ±30%	Jw ±30%
	VG 95343 T08C001A	206–1	13.0 (.51)	7.0 (.28)	6.0 (.24)	3.0 (.12)	19.0 (.75)	13.0 (.51)	41.0 (1.61)	22.0 (.87)	19.0 (.75)	1.5 (.06)	1.0 (.04)
	–	206–2	14.0 (.55)	9.0 (.35)	6.0 (.24)	3.0 (.12)	19.0 (.75)	13.0 (.51)	41.0 (1.61)	22.0 (.87)	19.0 (.75)	1.5 (.06)	1.0 (.04)
*	–	206–3	10.0 (.39)	6.0 (.24)	6.5 (.25)	3.0 (.12)	19.0 (.75)	13.0 (.51)	36.0 (1.42)	17.0 (.67)	19.0 (.75)	1.6 (.06)	1.1 (.04)
	–	206–7	10.0 (.39)	6.0 (.24)	6.5 (.25)	3.0 (.12)	19.0 (.75)	13.0 (.51)	41.0 (1.61)	22.0 (.87)	19.0 (.75)	1.6 (.06)	1.1 (.04)
	VG 95343 T19C006A	206–8	13.0 (.51)	12.0 (.47)	6.1 (.24)	3.0 (.12)	19.0 (.75)	13.0 (.51)	41.0 (1.61)	22.0 (.87)	19.0 (.75)	1.5 (.06)	1.0 (.04)

* 206–3 CUT DOWN TO BE TRIMMED FROM THE H–END OF THE SHAPE

OPTIONAL FILLER PORT DETAIL

SPEC.	PART NO.	RECOVERED DIMENSIONS X ±20%	Y ±20%
VG 95343 T09C001A	206–1	18.0 (.71)	28.0 (1.1)
–	206–2	18.0 (.71)	28.0 (1.1)
–	206–3	13.0 (.51)	23.0 (.91)
–	206–7	18.0 (.71)	28.0 (1.1)
–	206–8	18.0 (.71)	28.0 (1.1)

OPTION TO STANDARD PART FILLER PORT (CODE P)

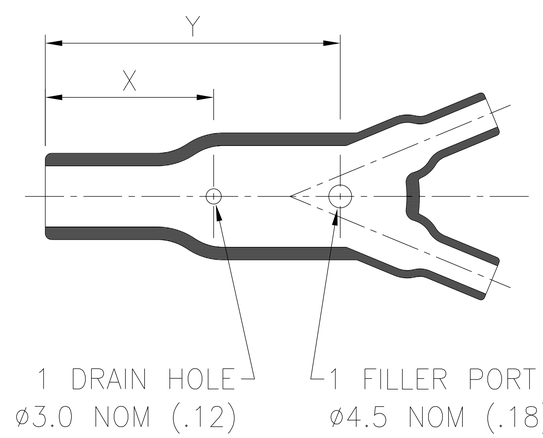

Heatshrinkable Moulded Shapes Bulbous Boots 2-Way Outlet HellermannTyton For information only, not subject to technical changes.

ISSUE	NOTE No.	DRAWN	DATE
9	P1610	KH	15/11/17
8	P1502	GL	27/04/15
7	P1497	GB	05/02/15
6	P1487	CB	06/11/14
5	P1353	L.F.	14/07/11

HellermannTyton

Hilltop Products Ltd-www.hilltop-products.co.uk
Tel: +44 1942 723101
Email: sales@hilltop-products.co.uk

NAME	S.Almond	SCALE	NTS	ADHESIVE	A3 ORIGINAL SHEET SIZE 420mm x 297mm	SHT. 1 OF 1 SHTS.
DATE	26/03/08	DIMS IN	mm (in)			
TITLE	2 WAY OUTLET SLEEVE			PART No.	206	DRAWING No. 152035